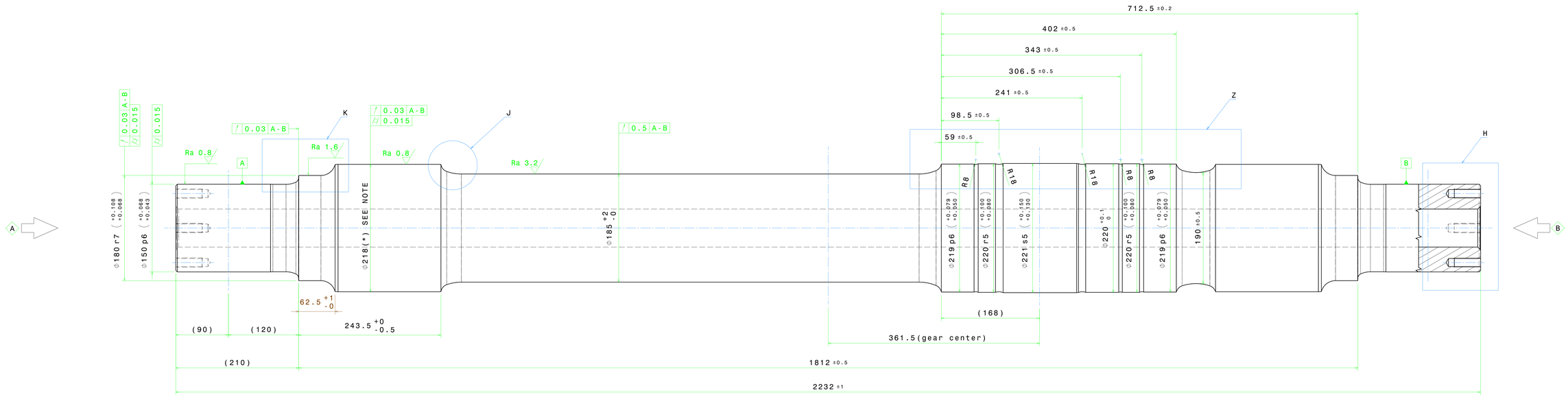

Detail K
Scale: 1:1

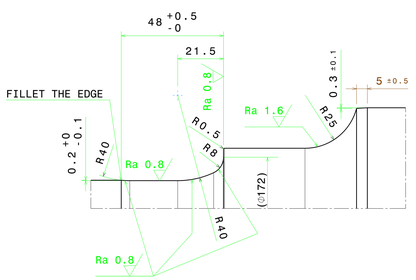

Detail J
Scale: 1:1

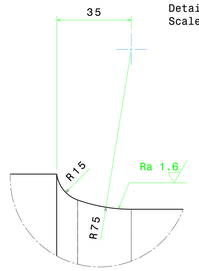

Detail H
Scale: 1:1

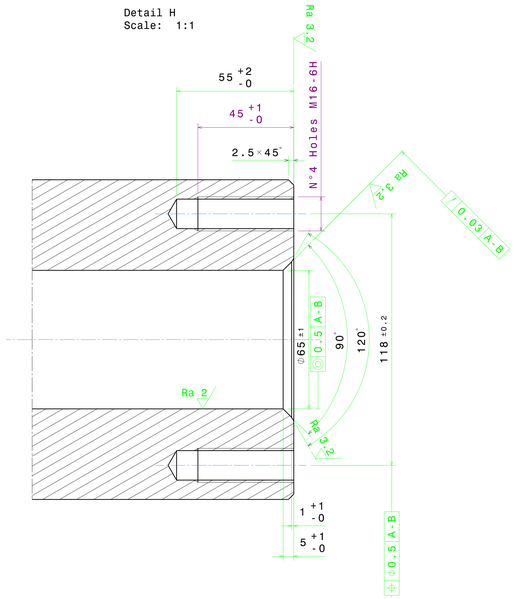

Detail Z

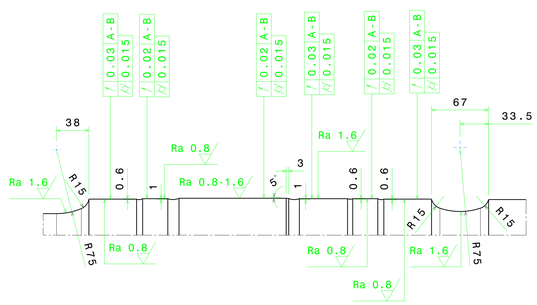

(#) View from A
"AXLE MARKING"

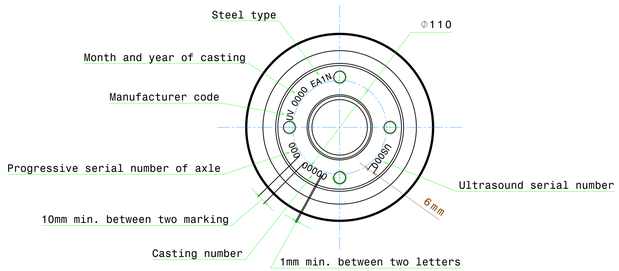

(##) View from B
"WHEELSET MARKING"

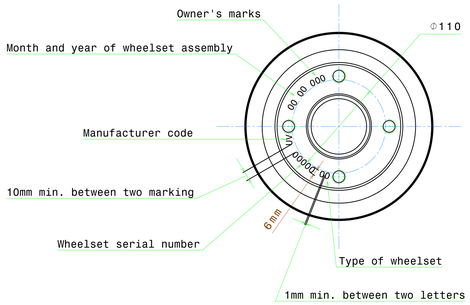

NOTE

Round off the edges for wheelset

(*) -Level Class: 1 ⌀218 v6 +0.339 +0.310
-Level Class: 2 ⌀215 v6 +0.339 +0.310

-Design occording to EN13103-1; EN13261
and Technical Specification TS-02.075

MARKING:
(#) - Reference drawing "vma1099"
(##) - Reference drawing "VMA0052"

Ra 6.3 (Ra 3.2 Ra 2 Ra 1.6 Ra 0.8)

ISO 13920 Welded Construction (C Type General Tolerance)		
<1000	6,0	0,8
<630	4,0	0,7
<400	3,0	0,6
<250	3,0	0,4
100	2,0	0,3
40	1,5	0,2
L mm	H±H	Yp
Nom. Size	Class	
<4000	2,0	0,4
<2000	1,2	0,4
<1000	0,8	0,3
<400	0,5	0,3
30-120	0,3	0,2
2-30	0,2	0,1
L mm	m ±	K ±
Nom. Size	Class	
>20000	9,0	8,0
<20000	8,0	7,0
<16000	7,0	6,0
<12000	6,0	5,0
<8000	5,0	4,0
<4000	4,0	3,0
<2000	3,0	2,0
<1000	2,0	1,5
<400	1,0	1,0
30-120	1,0	0,5
2-30	1,0	0,5
L mm	A ±	E ±
Nom. Size	Class	

ISO 2768 General Tolerances (S 12/78 Steel Casting)		
<1000	6,0	0,8
<630	4,0	0,7
<400	3,0	0,6
<250	3,0	0,4
100	2,0	0,3
40	1,5	0,2
L mm	H±H	Yp
Nom. Size	Class	
<4000	2,0	0,4
<2000	1,2	0,4
<1000	0,8	0,3
<400	0,5	0,3
30-120	0,3	0,2
2-30	0,2	0,1
L mm	m ±	K ±
Nom. Size	Class	
>20000	9,0	8,0
<20000	8,0	7,0
<16000	7,0	6,0
<12000	6,0	5,0
<8000	5,0	4,0
<4000	4,0	3,0
<2000	3,0	2,0
<1000	2,0	1,5
<400	1,0	1,0
30-120	1,0	0,5
2-30	1,0	0,5
L mm	A ±	E ±
Nom. Size	Class	

No	Parça Adı / Designation Name of Item	Adet / Qty.	Resim No / Norm Drawing No / Norm	Malzeme / Material	Ölçü / Dimension	Ağırlık / Weight (Kg)
				EA1N EN13261		449,5

ISO 21920-1	ISO 8015	ISO 2553	General Tol.	ISO 2768	f ☐ m☐ H☐ K☐
EN 15085-2 Certification Level		CL1☐ CL2☐ CL3☐	Weld Pro. Cast Steel	ISO 13920	A☐ B☐ E☐ F☐
				ISO 12708	Lm2☐ Lr2☐ Sm2☐ Sr2☐
Approved	L.Giovinazzo	13/02/2023	Scale		
Checked	M.Borlo	13/02/2023	1:2.5		
Prepared	D.Carlino	13/02/2023			

TURASAS
Turkish Railway Vehicles Industry Inc.

Powered Axle
-

TYP

Date: 13/02/2023

GZ10.04.04.30000

Sheet : 1/1 | Size:A0 | Rev: 00

Technical Specifications					
Technical Document					
Fixture/Mould Asset ID.					
Coating/Heat Tre./Roughness					
Paint/Color	-	Modf. No	Modification Description	Date	Sign

Reproduction, dissemination or use of this document or its all contents in any form without the prior written permission of TURASAS is prohibited. Offenders will be liable for the payment of damages. All rights reserved in the event of the grant of a patent, utility model or ornamental design registration.